NOCCHI SENSORMAT
PRESSURE BOOSTER SET WITH PRESSURE TRANSDUCER

COMPACT, STURDY, HIGH HYDRAULIC PERFORMANCE, PIPING IN AISI 304

They are booster sets for the automatic pressurization of water distribution networks with three-phase power supply, controlled by a fixed speed transducer.

The pumps are controlled through an electrical panel equipped with an electronic board associated with an electronic transducer that detects the output pressure. Using the keyboard of the electrical panel, the configuration and calibration parameters of the unit are entered (starting and stopping pressure of each pump, timer for each pump, etc...).

The pumps start and stop when the network pressure reaches the value assigned to them. At the end of each cycle, the automatic inverter changes the starting order of the pumps. In the event of heavy collections, the electronic board starts the pumps progressively, avoiding abrupt changes in the pressure and overload of the power supply.

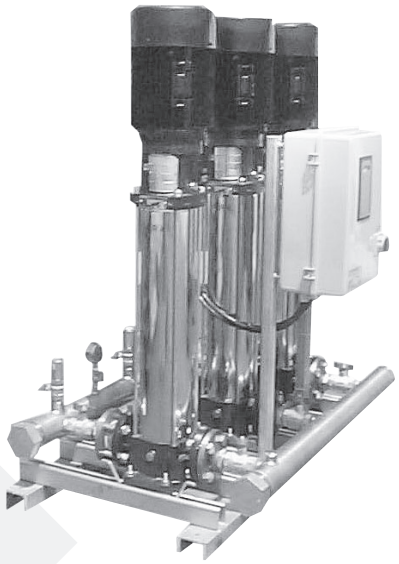

NUMBER OF PUMPS		MAXIMUM CAPACITY	
Main	Pilot	L/min	m³/h
2	1	2000	120
3	-	2000	120
3	1	2667	160

USAGE DATA	MULTINOX - VE	PVM 15			PVM 32		
	SMD30	SMD21	SMD30	SMD31	SM.21	SM.30	SM.31
Maximum capacity (m³/h)	37.8	70.5	70.5	94	120	120	160
Maximum head (m.c.a.)	140	125	125	125	120	120	120
Maximum operating pressure	14 bar	16 bar					
Power supply VOLT.:	3~400 V						
Start direct pumps	Direct up t 7.5 kW - Start-Delta above 7.5 kW						
Ambient temperature	50° C						
Degree of protection of pump	IP44	IP55					
Degree of protection of electrical panel	IP54						

NOCCHI SENSORMAT
PRESSURE BOOSTER SET WITH PRESSURE TRANSDUCER

PUMP

MULTINOX-VE + / PVM:

- Centrifugal, multicellular, vertical axis

BASE

- Profile in galvanized steel

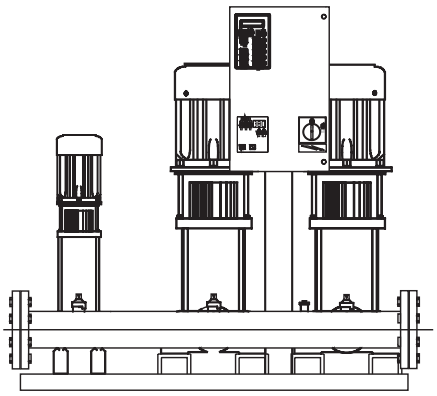

SUCTION MANIFOLD

In stainless steel AISI 304 with:

- n. 1 sleeve for water load
- n. 1 brass ball valve *
- n. 1 check valve *

DELIVERY MANIFOLD

in stainless steel AISI 304

- n. 1 pressure gauge
- n. 1 pressure transducer 0-5Volt – 0-10 Bar
- n. 1 brass ball valve *

* components for each pump installed

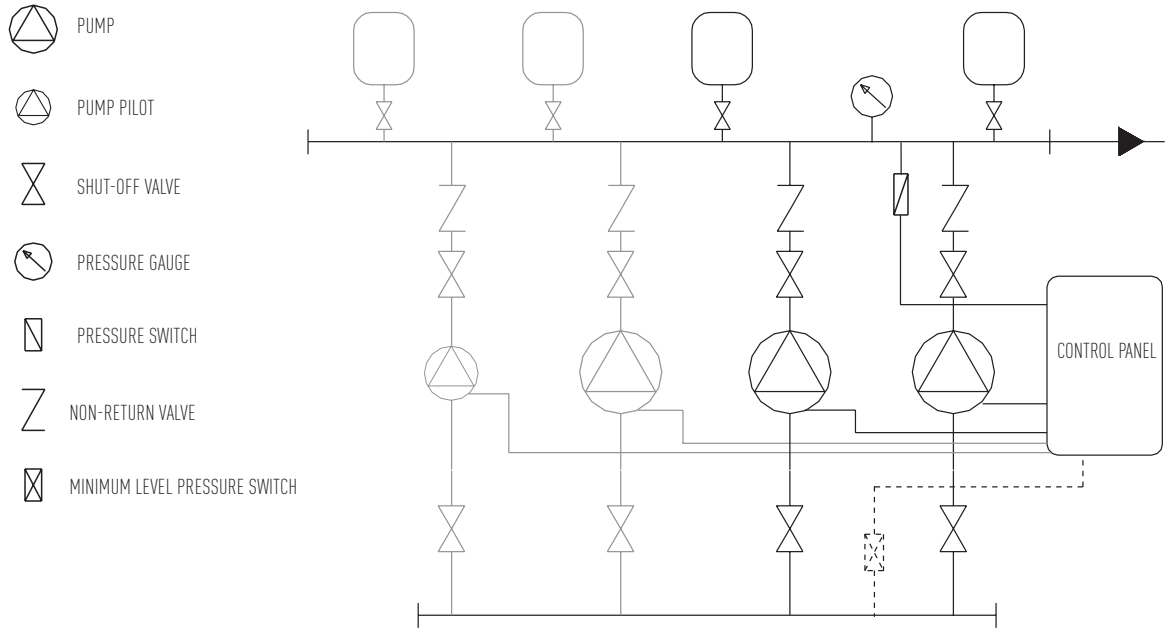

NOCCHI SENSORMAT
PRESSURE BOOSTER SET WITH PRESSURE TRANSDUCER

THREE-PHASE ELECTRICAL PANEL

ELECTRICAL PANEL

- Box in metal IP54
- Main switch
- Keyboard with electronic board SA
- Fuses, contactor and thermal relay for each pump
- Transformer with fuses for the auxiliary circuit
- M-0-T switch for each pump
- Star-delta starter for motors above 7.5 kW

SIGNALS AND CONTROLS

- Liquid crystal display to indicate the operating parameters and to enter the configuration and calibration values.
- LED indicating the presence of power.
- LED indicating the low water level in the tank or an insufficient pressure in the supply duct (aqueduct).
- LED indicating that the thermal relays has tripped because of an overload.
- LED indicating manual or automatic operation.
- LED indicating the operation of each pump.
- Buttons to select manual or automatic control.
- Start - stop button for each pump when manual operation has been selected
- Button to enter the configuration parameters

MAIN FUNCTIONS

- Cyclic inversion of the start-up order of the pumps after each cycle end.
- Timer, adjustable from 0 to 255 seconds, for the operation of the pumps after the opening of the contact of the pressure switch or when the operating pressure has been reached.
- ON/OFF control of the level of the tank or the pressure of the supply duct by means of a float switch or a different differential pressure switch.
- Sequential control of the start-up of the pumps to prevent them from starting at the same time.

EXTERNAL CONTROL DEVICES

- A differential pressure switch that can be turned ON or OFF for each pump, or
- An electric pressure transducer (0-5 V)

ACCESSORIES

Sensormat accessories available on request	SDM SMY
Float switch for protection against dry running	X
Differential pressure switch for exclusion in case of lack of network pressure	X
Electrodes for electronic level control	X
Membrane autoclaves	X

NOCCHI SMD21 PVM
PRESSURE BOOSTER SET WITH PRESSURE TRANSDUCER

HYDRAULIC PERFORMANCE

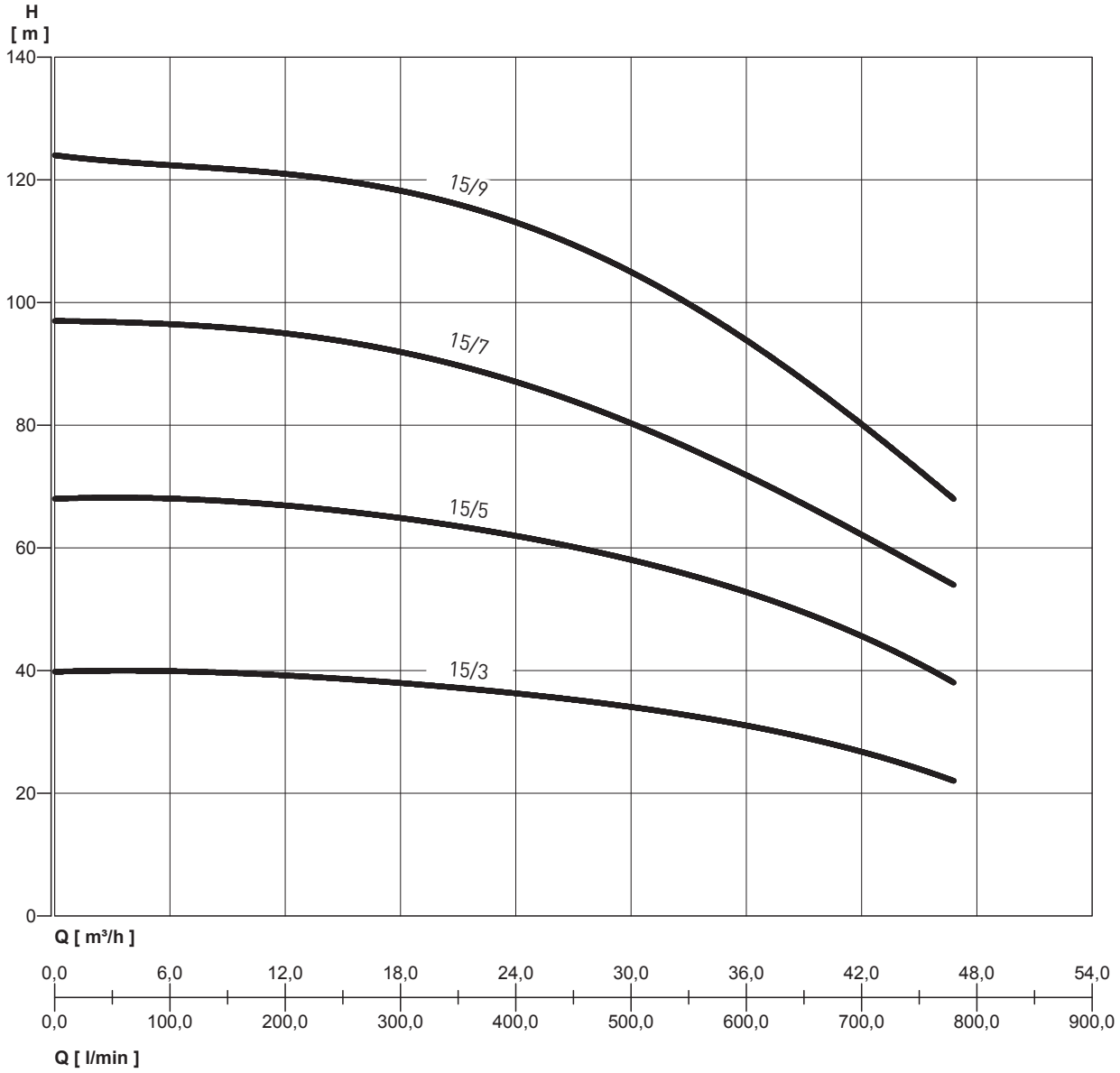

NOCCHI SMD21 PVM
PRESSURE BOOSTER SET WITH PRESSURE TRANSDUCER

PERFORMANCE TABLE

MODEL	P2	VOLT. (V)	Q	l/min	0	200	400	600	700	780
	kW			m^3/h	0	12	24	36	42	47
SMD21 PVM 15-3 + PVM 3-8	2x3	3 ~ 400	m.c.a. / m.c.w.		39.8	39.2	36.3	31	26.8	22
SMD21 PVM 15-5 + PVM 3-15	2x4	3 ~ 400			68	66.9	62	52.7	45.7	38
SMD21 PVM 15-7 + PVM 3-19	2x5.5	3 ~ 400			97	95	87	72	62	54
SMD21 PVM 15-9 + PVM 3-25	2x7.5	3 ~ 400			124	121	113	94	80	68

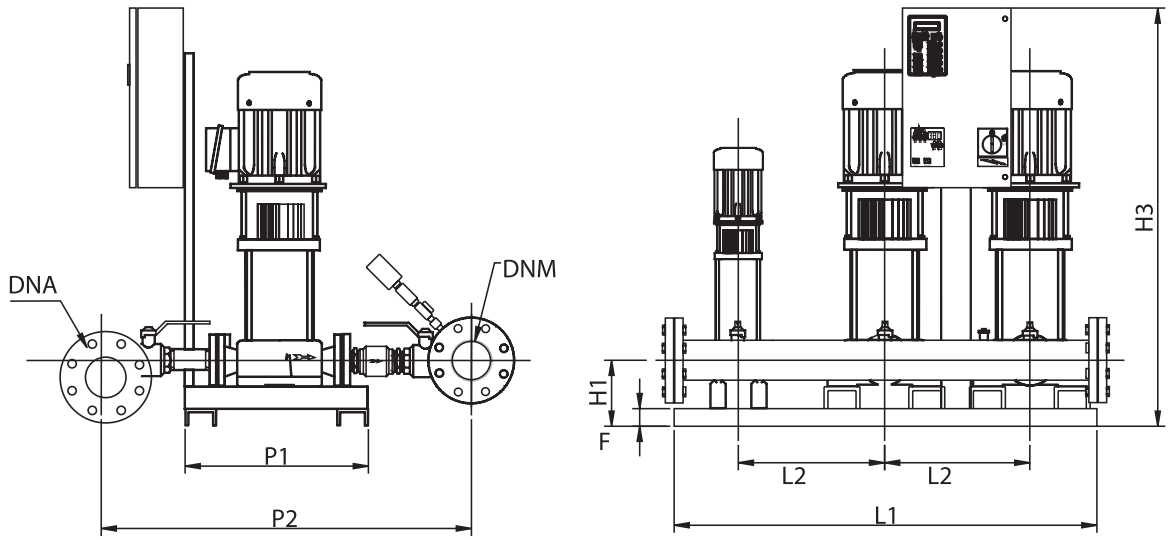

OVERALL DIMENSIONS AND WEIGHTS

MODEL	Dimensions mm.									WEIGHTS (Kg)
	L1	P1	P2	H1	H3	DNA	DNM	F	L2	
SMD21 PVM 15-3 + PVM 3-8	1100	610	860	180	1200	3"	3"	45	370	233
SMD21 PVM 15-5 + PVM 3-15	1100	610	860	180	1200	3"	3"	45	370	240
SMD21 PVM 15-7 + PVM 3-19	1100	610	860	180	1200	3"	3"	45	370	298
SMD21 PVM 15-9 + PVM 3-25	1100	610	860	180	1200	3"	3"	45	370	312

NOCCHI SM.21 PVM
PRESSURE BOOSTER SET WITH PRESSURE TRANSDUCER

HYDRAULIC PERFORMANCE

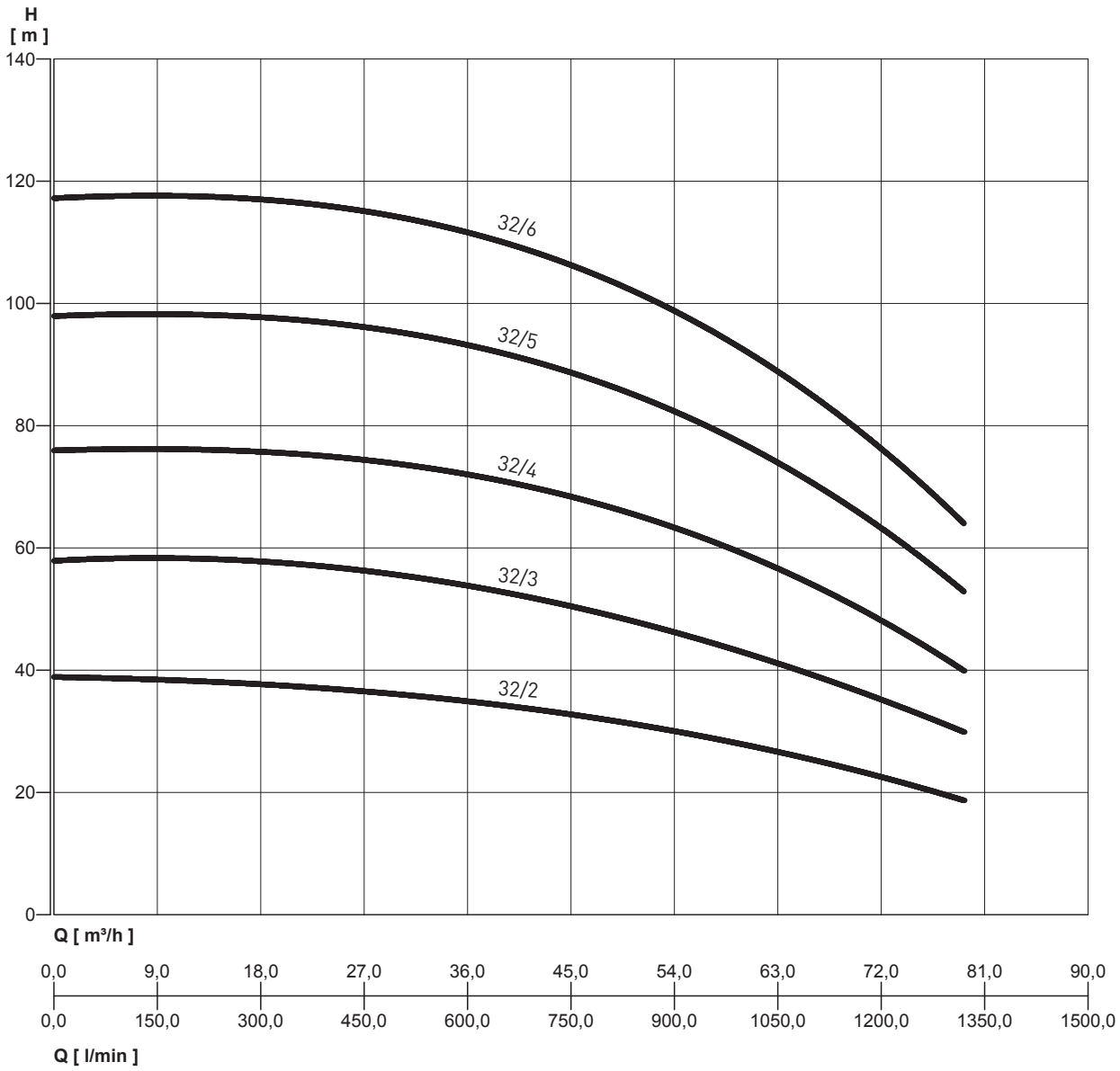

NOCCHI SM.21 PVM
PRESSURE BOOSTER SET WITH PRESSURE TRANSDUCER

PERFORMANCE TABLE

MODEL	P2	VOLT. (V)	Q	l/min	0	200	400	600	800	1000	1200	1320
	kW			m^3/h	0	12	24	36	48	60	72	79.2
SMD21 PVM 32-2 + PVM 3-8	2x4	3 ~ 400	m.c.a. / m.c.w.		39	38	37	35	32	28	22	19
SMD21 PVM 32-3 + PVM 3-11	2x5.5	3 ~ 400			58	58	57	54	49	43	35	30
SMD21 PVM 32-4 + PVM 3-15	2x7.5	3 ~ 400			76	76	75	72	67	59	48	40
SMY21 PVM 32-5 + PVM 3-19	2x11	3 ~ 400			98	98	97	93	87	77	63	53
SMY21 PVM 32-6 + PVM 3-19	2x11	3 ~ 400			117	118	116	111	104	93	76	64

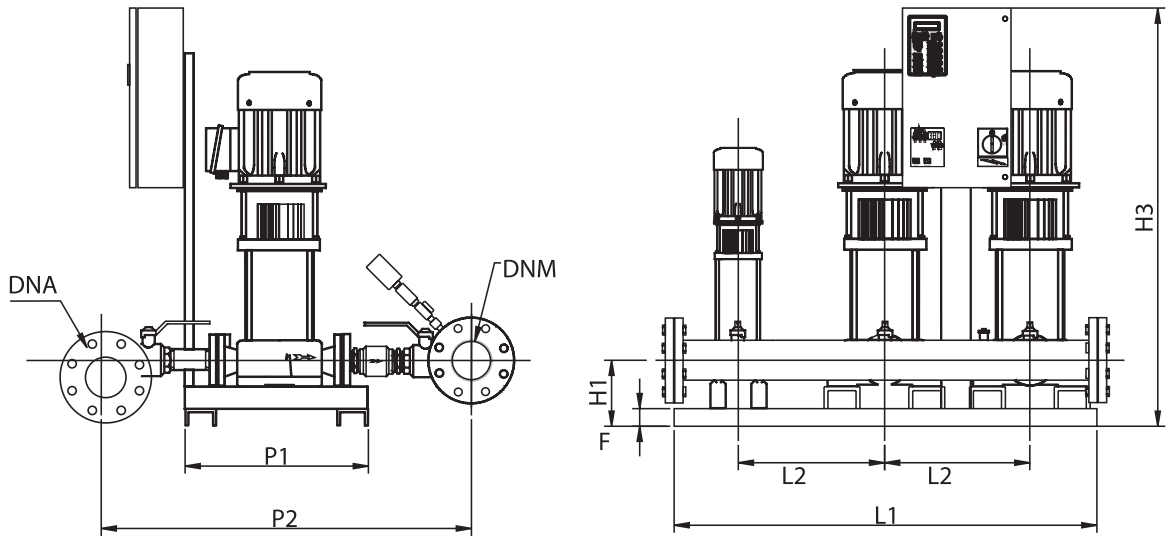

OVERALL DIMENSIONS AND WEIGHTS

MODEL	Dimensions mm.									WEIGHTS (Kg)
	L1	P1	P2	H1	H3	DNA	DNM	F	L2	
SMD21 PVM 32-2 + PVM 3-8	1300	700	1060	230	1520	4"	4"	80	440	380
SMD21 PVM 32-3 + PVM 3-11	1300	700	1060	230	1520	4"	4"	80	440	404
SMD21 PVM 32-4 + PVM 3-15	1300	700	1060	230	1520	4"	4"	80	440	424
SMY21 PVM 32-5 + PVM 3-19	1300	700	1060	230	1520	4"	4"	80	440	497
SMY21 PVM 32-6 + PVM 3-19	1300	700	1060	230	1520	4"	4"	80	440	548

NOCCHI SMD30 MULTINOX VE+
PRESSURE BOOSTER SET WITH PRESSURE TRANSDUCER

HYDRAULIC PERFORMANCE

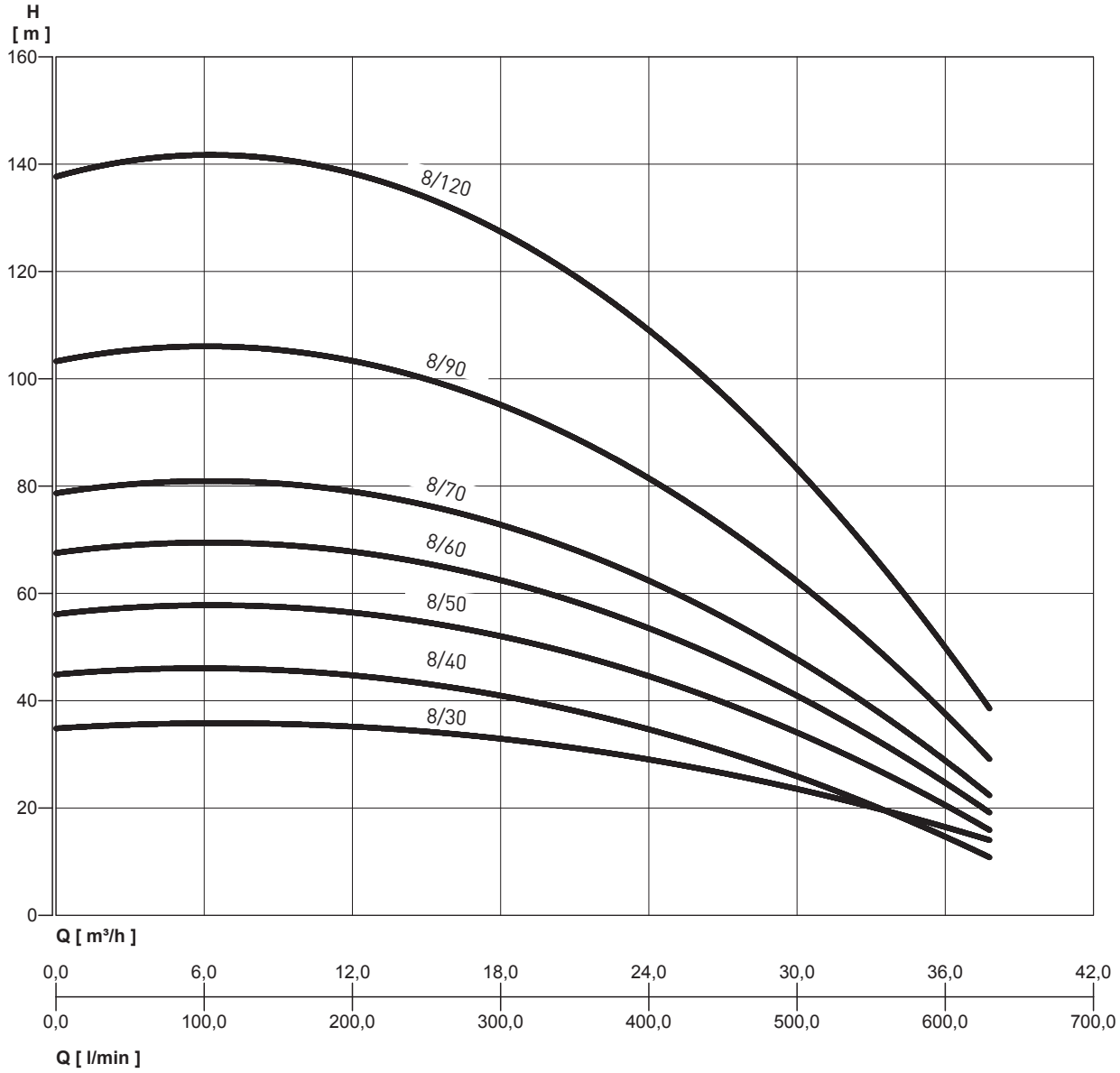

NOCCHI SMD30 MULTINOX VE+
PRESSURE BOOSTER SET WITH PRESSURE TRANSDUCER

PERFORMANCE TABLE

MODEL	kW	VOLT. (V)	l/1'	0	90	180	270	360	450	540	630
			mc / h	0	5.4	10.8	16.2	21.6	27	32.4	37.8
SMD30-MULTINOX VE+ 8-30	3x1	3 ~ 400	m.c.a. / m.c.w.	36	35	35	33	30	25	28	10
SMD30-MULTINOX VE+ 8-40	3x1.2	3 ~ 400		46	45	44	42	39	32	20	11
SMD30-MULTINOX VE+ 8-50	3x1.5	3 ~ 400		57	57	56	53	50	40	28	16
SMD30-MULTINOX VE+ 8-60	3x1.7	3 ~ 400		69	68	67	64	60	48	34	19
SMD30-MULTINOX VE+ 8-70	3x1.9	3 ~ 400		80	80	78	74	70	56	40	22
SMD30-MULTINOX VE+ 8-90	3x3	3 ~ 400		105	104	103	98	90	73	52	29
SMD30-MULTINOX VE+ 8-120	3x4	3 ~ 400		140	139	138	131	120	98	70	38

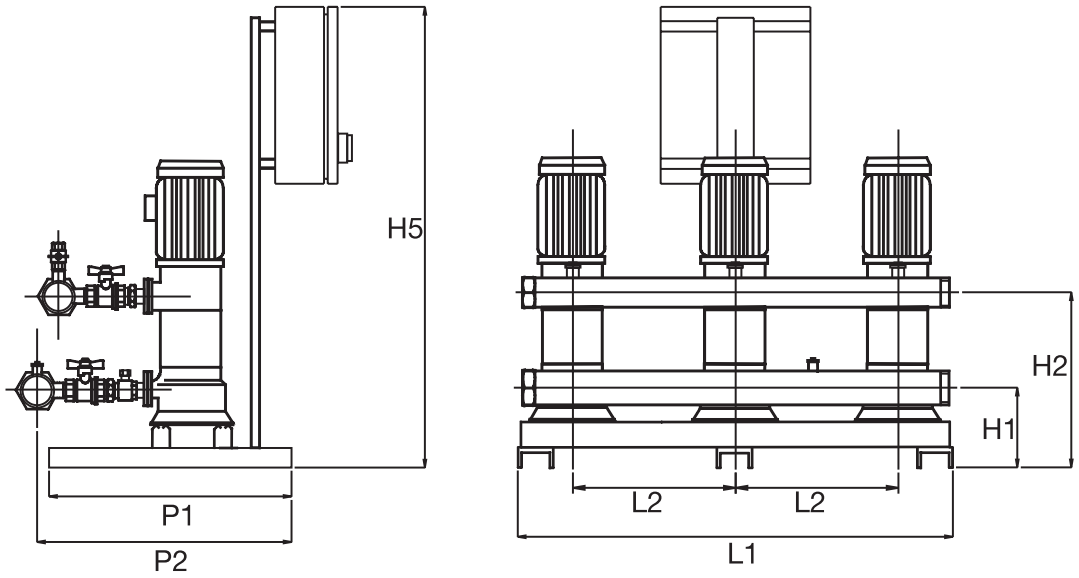

OVERALL DIMENSIONS AND WEIGHTS

MODEL	Dimensions mm.									WEIGHTS (Kg)
	L1	P1	P2	H1	H2	H5	DNA	DNM	L2	
SMD30-MULTINOX VE+ 8-30	1200	500	540	143	273	1100	3"	2"1/2	370	114
SMD30-MULTINOX VE+ 8-40	1200	500	540	143	300	1100	3"	2"1/2	370	126
SMD30-MULTINOX VE+ 8-50	1200	500	540	143	327	1100	3"	2"1/2	370	138
SMD30-MULTINOX VE+ 8-60	1200	500	540	143	354	1100	3"	2"1/2	370	144
SMD30-MULTINOX VE+ 8-70	1200	500	540	143	381	1100	3"	2"1/2	370	156
SMD30-MULTINOX VE+ 8-90	1200	500	540	143	435	1100	3"	2"1/2	370	160
SMD30-MULTINOX VE+ 8-120	1200	500	540	143	516	1100	3"	2"1/2	370	172

NOCCHI SMD30 PVM
PRESSURE BOOSTER SET WITH PRESSURE TRANSDUCER

HYDRAULIC PERFORMANCE

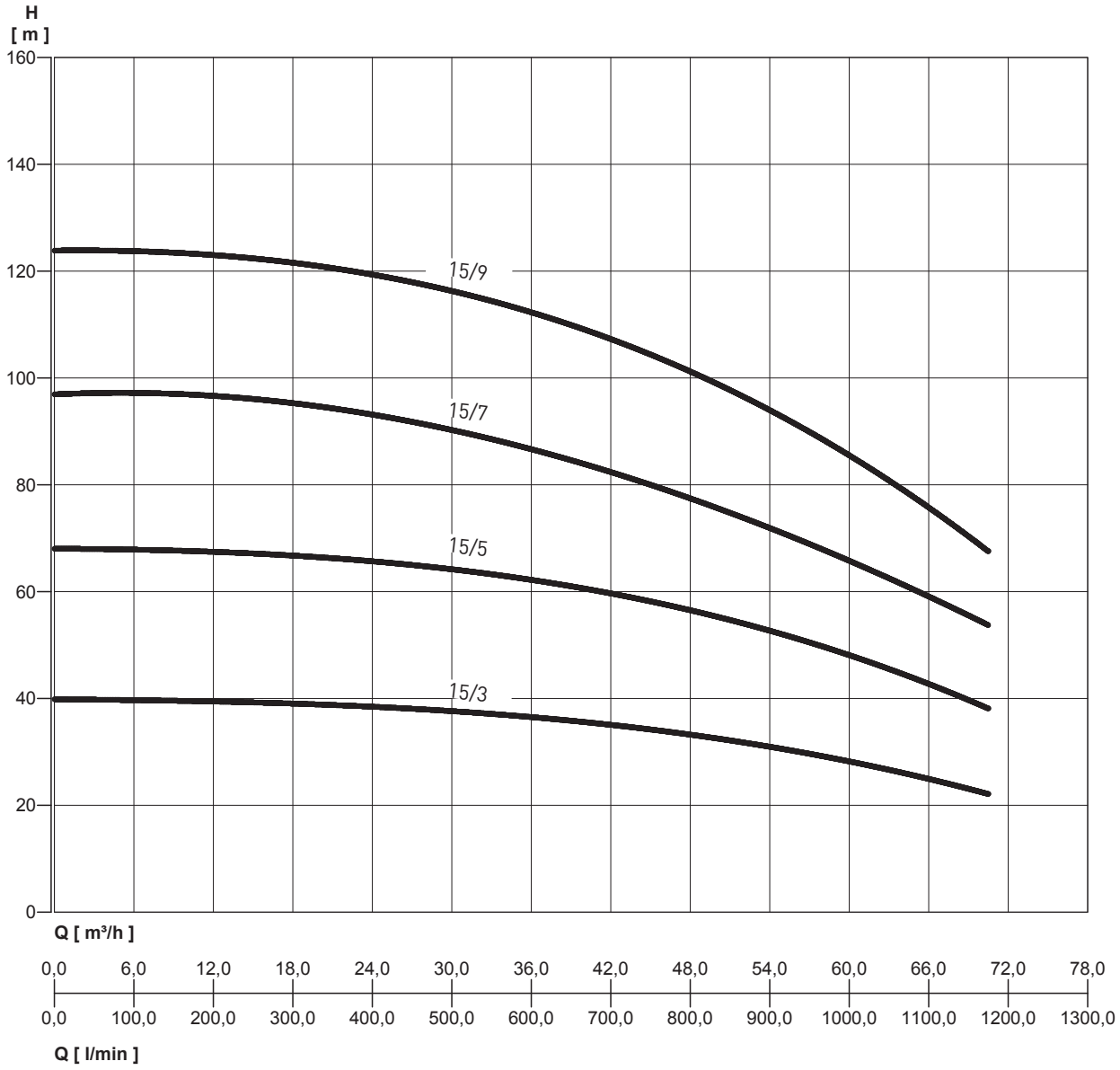

NOCCHI SMD30 PVM
PRESSURE BOOSTER SET WITH PRESSURE TRANSDUCER

PERFORMANCE TABLE

MODEL	P2	VOLT. (V)	Q	l/min	0	300	600	900	1050	1175
	kW			m^3/h	0	18	36	54	63	70.5
SMD30 PVM 15-3	3x3	3 ~ 400	m.c.a. / m.c.w.		39.8	39.2	36.3	31	26.8	22
SMD30 PVM 15-5	3x4	3 ~ 400			68	66.9	62	52.7	45.7	38
SMD30 PVM 15-7	3x5.5	3 ~ 400			97	95	87	72	62	54
SMD30 PVM 15-9	3x7.5	3 ~ 400			124	121	113	94	80	68

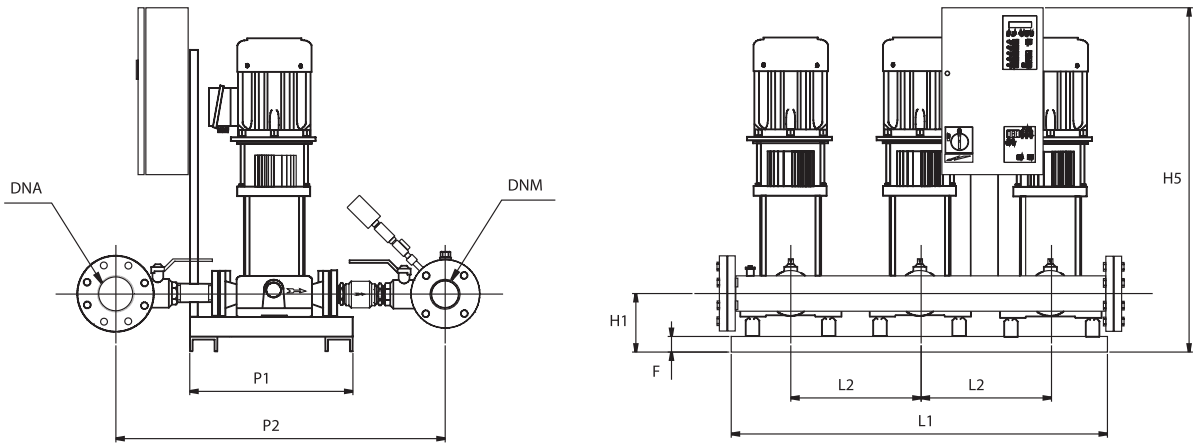

OVERALL DIMENSIONS AND WEIGHTS

MODEL	Dimensions mm.									WEIGHTS (Kg)
	L1	P1	P2	H1	H5	DNA	DNM	F	L2	
SMD30 PVM 15-3	1100	610	860	180	1200	4"	3"	45	370	264
SMD30 PVM 15-5	1100	610	860	180	1200	4"	3"	45	370	273
SMD30 PVM 15-7	1100	610	860	180	1200	4"	3"	45	370	348
SMD30 PVM 15-9	1100	610	860	180	1200	4"	3"	45	370	366

NOCCHI SM.30 PVM
PRESSURE BOOSTER SET WITH PRESSURE TRANSDUCER

HYDRAULIC PERFORMANCE

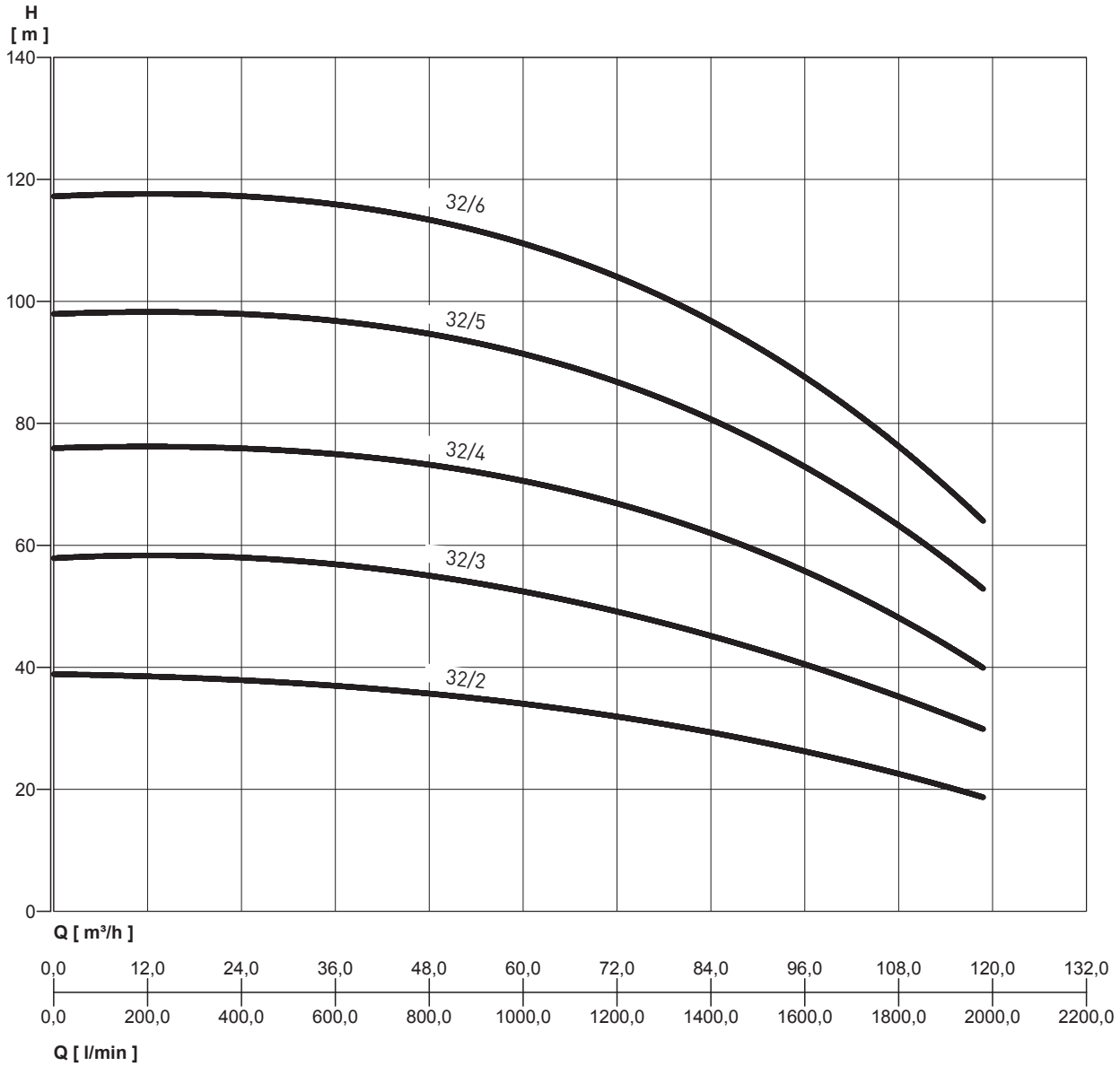

NOCCHI SM.30 PVM
PRESSURE BOOSTER SET WITH PRESSURE TRANSDUCER

PERFORMANCE TABLE

MODEL	P2	VOLT. (V)	Q	l/min	0	300	600	900	1200	1500	1800	1980
	kW			m^3/h	0	18	36	54	72	90	108	118.8
SMD30 PVM 32-2	3x4	3 ~ 400	m.c.a. / m.c.w.		39	38	37	35	32	28	22	19
SMD30 PVM 32-3	3x5.5	3 ~ 400			58	58	57	54	49	43	35	30
SMD30 PVM 32-4	3x7.5	3 ~ 400			76	76	75	72	67	59	48	40
SMY30 PVM 32-5	3x11	3 ~ 400			98	98	97	93	87	77	63	53
SMY30 PVM 32-6	3x11	3 ~ 400			117	118	116	111	104	93	76	64

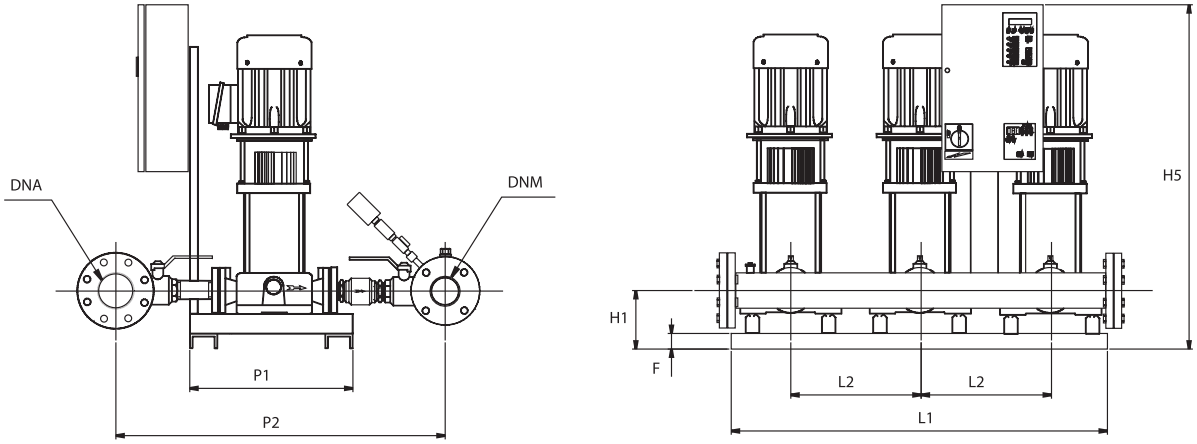

OVERALL DIMENSIONS AND WEIGHTS

MODEL	Dimensions mm.									WEIGHTS (Kg)
	L1	P1	P2	H1	H5	DNA	DNM	F	L2	
SMD30 PVM 32-2	1300	700	1060	230	1520	5"	4"	80	440	500
SMD30 PVM 32-3	1300	700	1060	230	1520	5"	4"	80	440	526
SMD30 PVM 32-4	1300	700	1060	230	1520	5"	4"	80	440	550
SMY30 PVM 32-5	1300	700	1060	230	1520	5"	4"	80	440	670
SMY30 PVM 32-6	1300	700	1060	230	1520	5"	4"	80	440	760

NOCCHI SMD31 PVM
PRESSURE BOOSTER SET WITH PRESSURE TRANSDUCER

HYDRAULIC PERFORMANCE

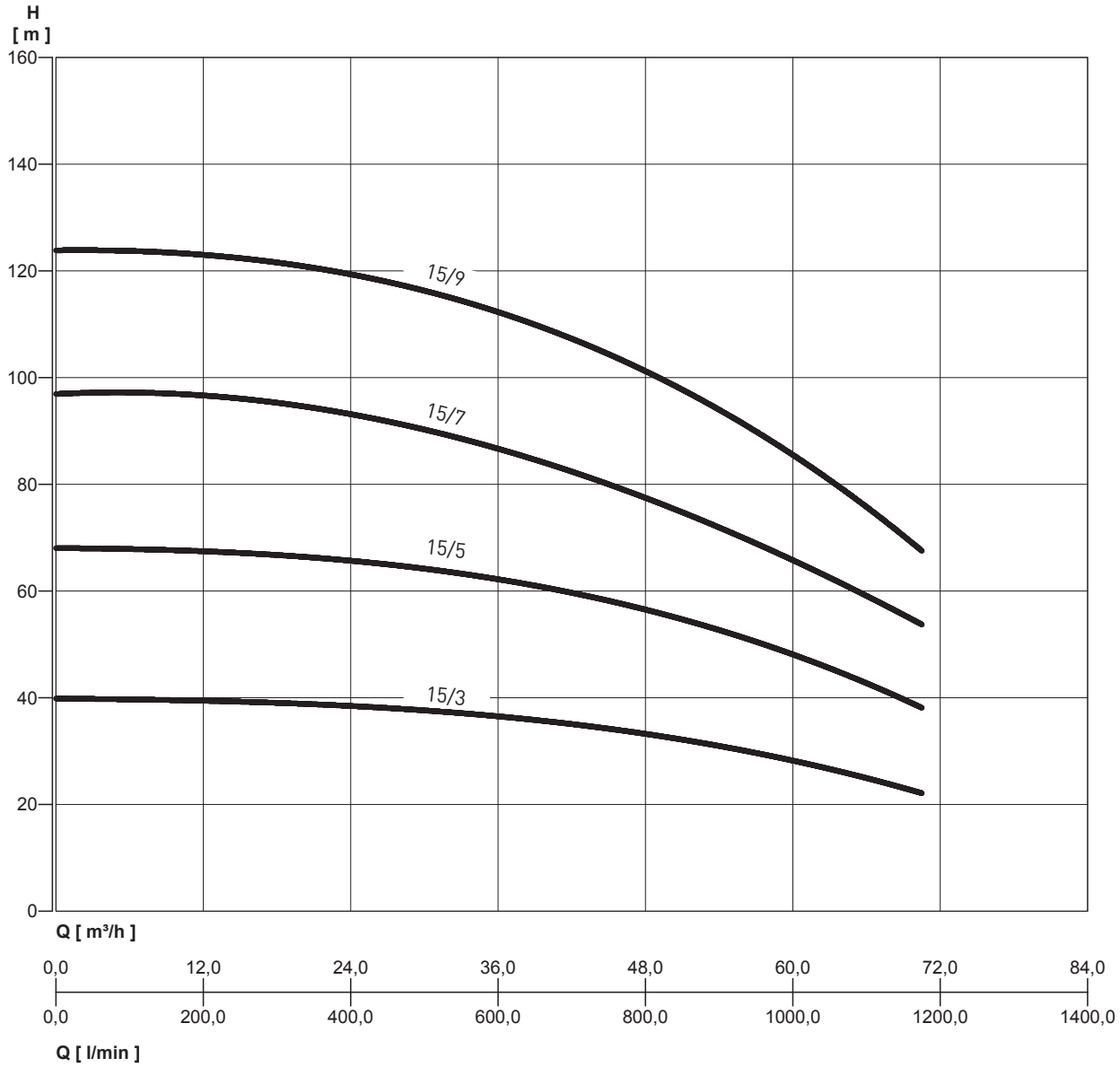

NOCCHI SMD31 PVM
PRESSURE BOOSTER SET WITH PRESSURE TRANSDUCER

PERFORMANCE TABLE

MODEL	P2	VOLT. (V)	Q	l/min	0	300	600	900	1050	1175
	kW			m^3/h	0	18	36	54	63	70.5
SMD31 PVM 15-3 + PVM 3-8	3x3	3 ~ 400	m.c.a. / m.c.w.		39.8	39.2	36.3	31	26.8	22
SMD31 PVM 15-5 + PVM 3-15	3x4	3 ~ 400			68	66.9	62	52.7	45.7	38
SMD31 PVM 15-7 + PVM 3-19	3x5.5	3 ~ 400			97	95	87	72	62	54
SMD31 PVM 15-9 + PVM 3-25	3x7.5	3 ~ 400			124	121	113	94	80	68

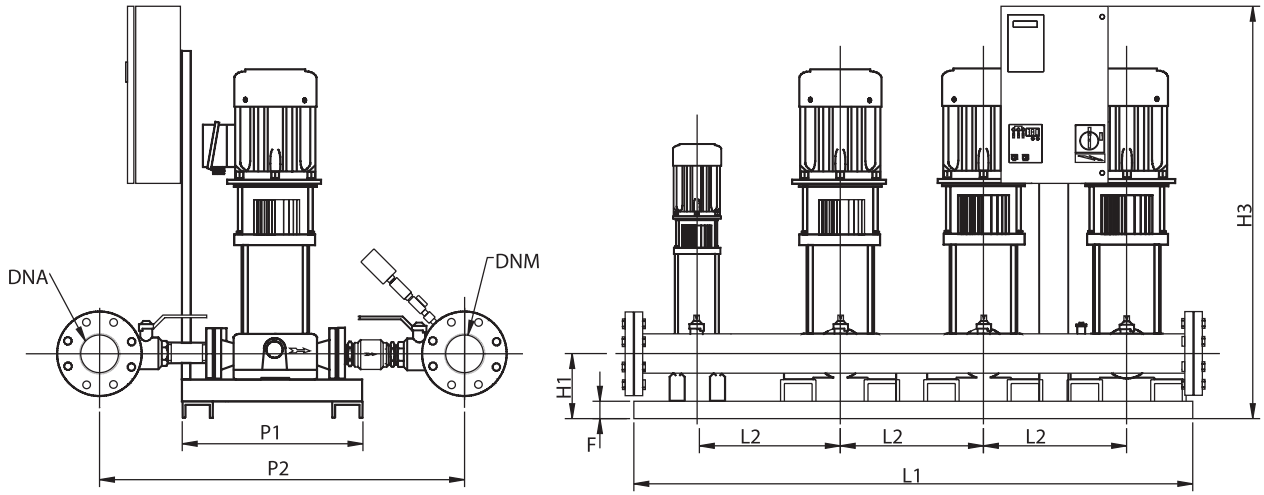

OVERALL DIMENSIONS AND WEIGHTS

MODEL	Dimensions mm.									WEIGHTS (Kg)
	L1	P1	P2	H1	H3	DNA	DNM	F	L2	
SMD31 PVM 15-3 + PVM 3-8	1500	610	860	180	1410	4"	4"	45	370	354
SMD31 PVM 15-5 + PVM 3-15	1500	610	860	180	1410	4"	4"	45	370	364
SMD31 PVM 15-7 + PVM 3-19	1500	610	860	180	1410	4"	4"	45	370	446
SMD31 PVM 15-9 + PVM 3-25	1500	610	860	180	1410	4"	4"	45	370	470

NOCCHI SM.31 PVM
PRESSURE BOOSTER SET WITH PRESSURE TRANSDUCER

HYDRAULIC PERFORMANCE

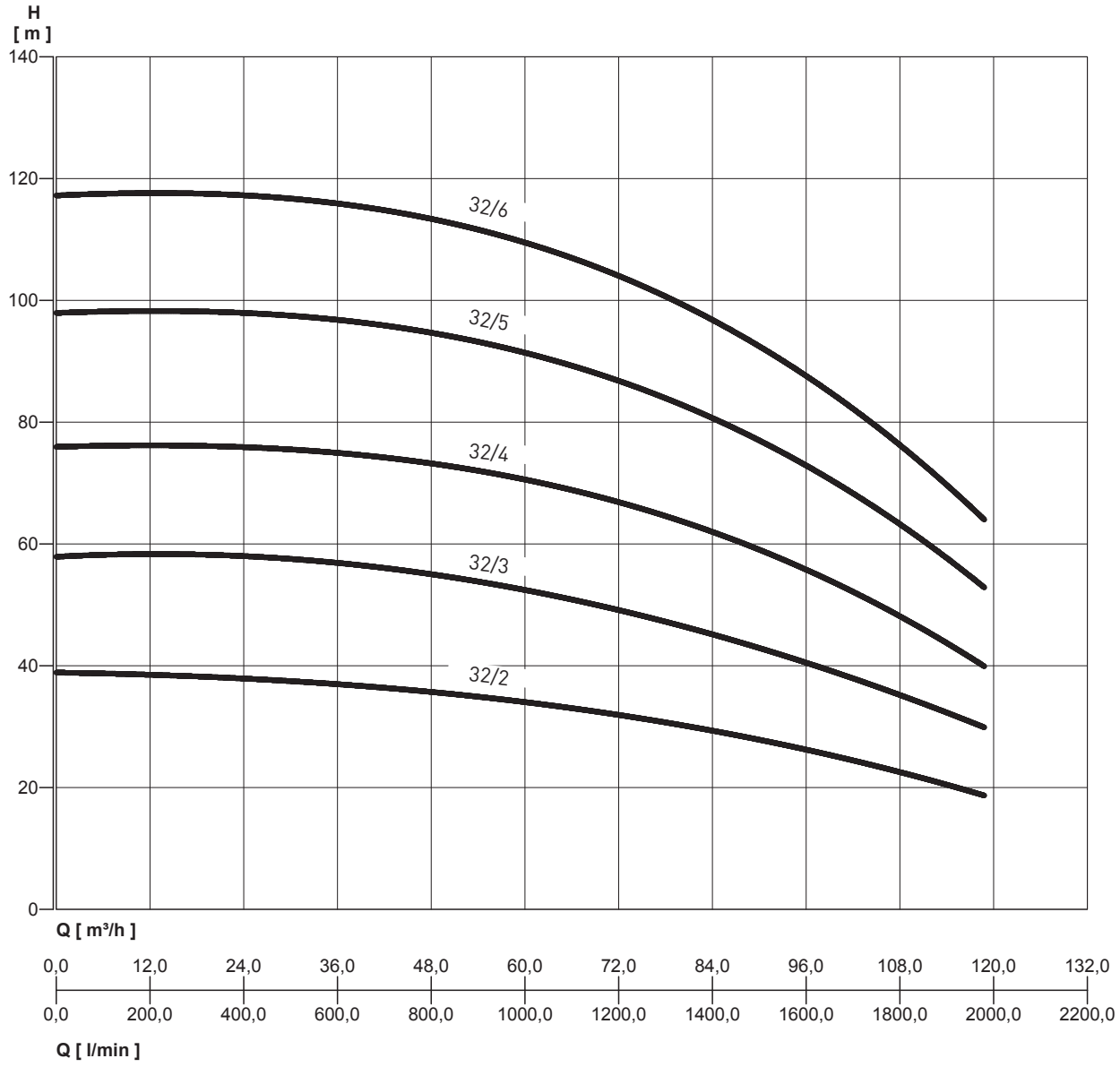

NOCCHI SM.31 PVM
PRESSURE BOOSTER SET WITH PRESSURE TRANSDUCER

PERFORMANCE TABLE

MODEL	P2	VOLT. (V)	Q	l/min	0	300	600	900	1200	1500	1800	1980
	kW			m^3/h	0	18	36	54	72	90	108	118.8
SMD31 PVM 32-2 + PVM 3-8	3x4	3 ~ 400	m.c.a. / m.c.w.		39	38	37	35	32	28	22	19
SMD31 PVM 32-3 + PVM 3-11	3x5.5	3 ~ 400			58	58	57	54	49	43	35	30
SMD31 PVM 32-4 + PVM 3-15	3x7.5	3 ~ 400			76	76	75	72	67	59	48	40
SMY31 PVM 32-5 + PVM 3-19	3x11	3 ~ 400			98	98	97	93	87	77	63	53
SMY31 PVM 32-6 + PVM 3-19	3x11	3 ~ 400			117	118	116	111	104	93	76	64

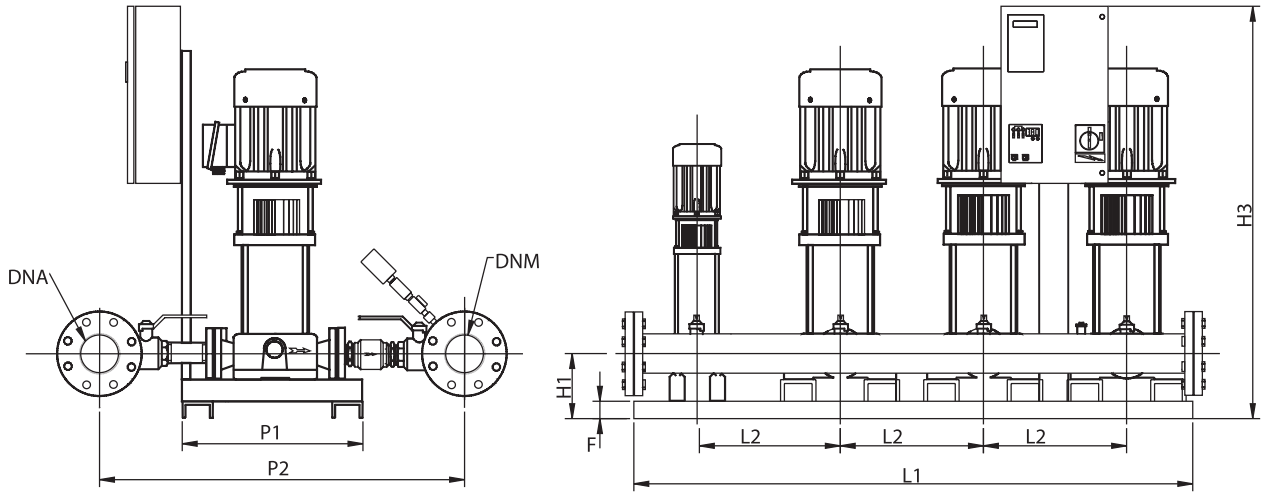

OVERALL DIMENSIONS AND WEIGHTS

MODEL	Dimensions mm.									WEIGHTS (Kg)
	L1	P1	P2	H1	H3	DNA	DNM	F	L2	
SMD31 PVM 32-2 + PVM 3-8	1750	700	1060	230	1520	6"	5"	80	440	550
SMD31 PVM 32-3 + PVM 3-11	1750	700	1060	230	1520	6"	5"	80	440	591
SMD31 PVM 32-4 + PVM 3-15	1750	700	1060	230	1520	6"	5"	80	440	611
SMY31 PVM 32-5 + PVM 3-19	1750	700	1060	230	1520	6"	5"	80	440	715
SMY31 PVM 32-6 + PVM 3-19	1750	700	1060	230	1520	6"	5"	80	440	840