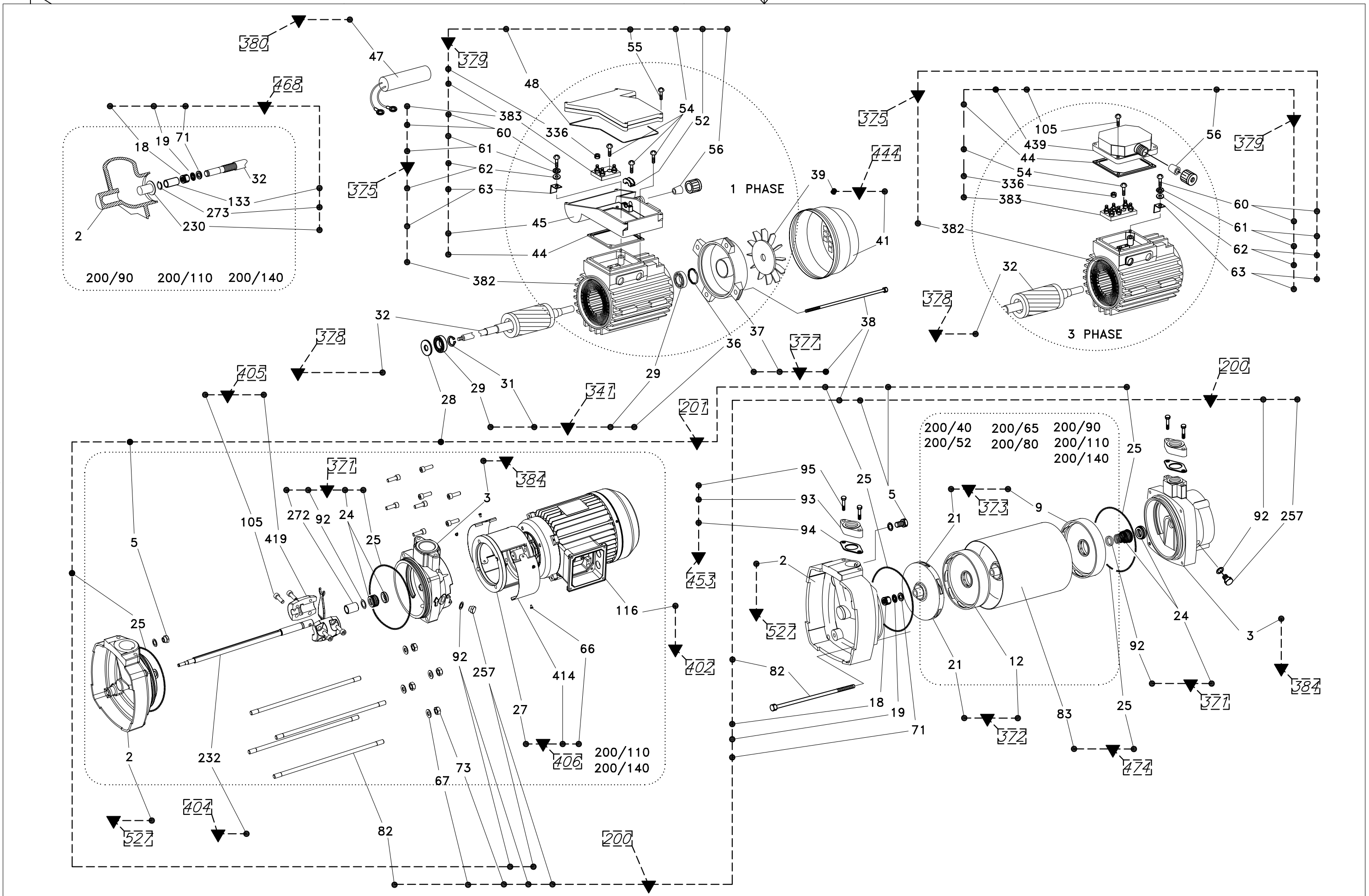

Pentair Water Italy S.r.l.
Via Masaccio,13
56010 Lugnano (PI)
ITALY

Drawn	Title	Sheet
Vaglini.	MULTINOX 200 VE	1 of 1
Approved: M.Bernacca	Date (dd/mm/yy): 14-04-09	Size: A3
		Dwg: DR090001_01

This drawing is the absolute property of Pentair Pumps S.r.L. It may not be reproduced in any form without the written permission of Pentair Pumps S.p.A